Atlantis Island
EAL-E42ASX
EAL-E48ASX

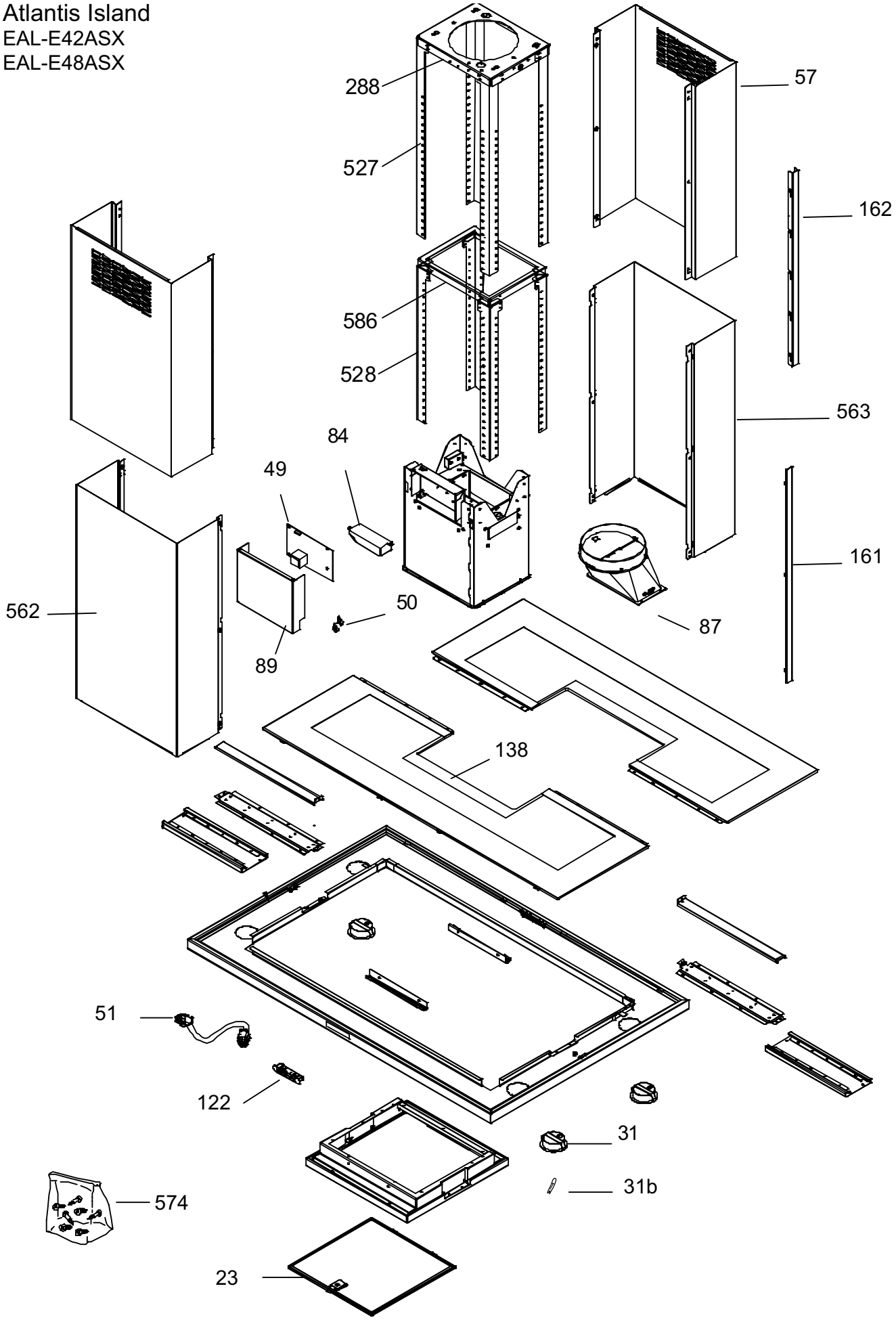

ZEPHYR

Atlantis Is.

EAL-E42ASX, EAL-E48ASX

Ref #	Part #	Description	Qty.
23	50200007	Filter, Stainless Steel	1
31	12100031	Bulb, Halogen w/Socket 20W 12V G-4 bi-pin	4
31b	Z0B0013	Bulb, Halogen 20W 12V G-4 bi-pin	4
49	11010004	Control Board	1
50	56240009	Screws, Control Board	4
51	11030009	Cable, Switch Assembly	1
57	50050034	Duct Cover, Top	2
84	12110002	Transformer	2
87	54050028	Duct Transition Piece	1
89	56200026	Housing, Control Board	1
122	11000020	Switch Assembly	1
138	50300006	Canopy, EAL-E42ASX	2
138	50300007	Canopy, EAL-E48ASX	2
161	50170012	Moulding, Bottom	2
162	50170013	Moulding, Top	2
288	54100007	Bracket, Ceiling	1
527	54120003	Bracket, Angle, Top	4
528	54120004	Bracket, Angle, Bottom	4
562	50050015	Duct Cover, Bottom Front	1
563	50050013	Duct Cover, Bottom Back	1
574	05000022	Hardware Packet	1
586	54140008	Bracket, Rectangular Support	1

MOTOR				
SPEED	K1	K2	K3	K4
1	ON	OFF	OFF	OFF
2	OFF	ON	OFF	OFF
3	OFF	OFF	ON	OFF
4	OFF	OFF	OFF	ON

LIGHT		
LEVEL	K5	K6
MAX	ON	OFF
MED	OFF	ON

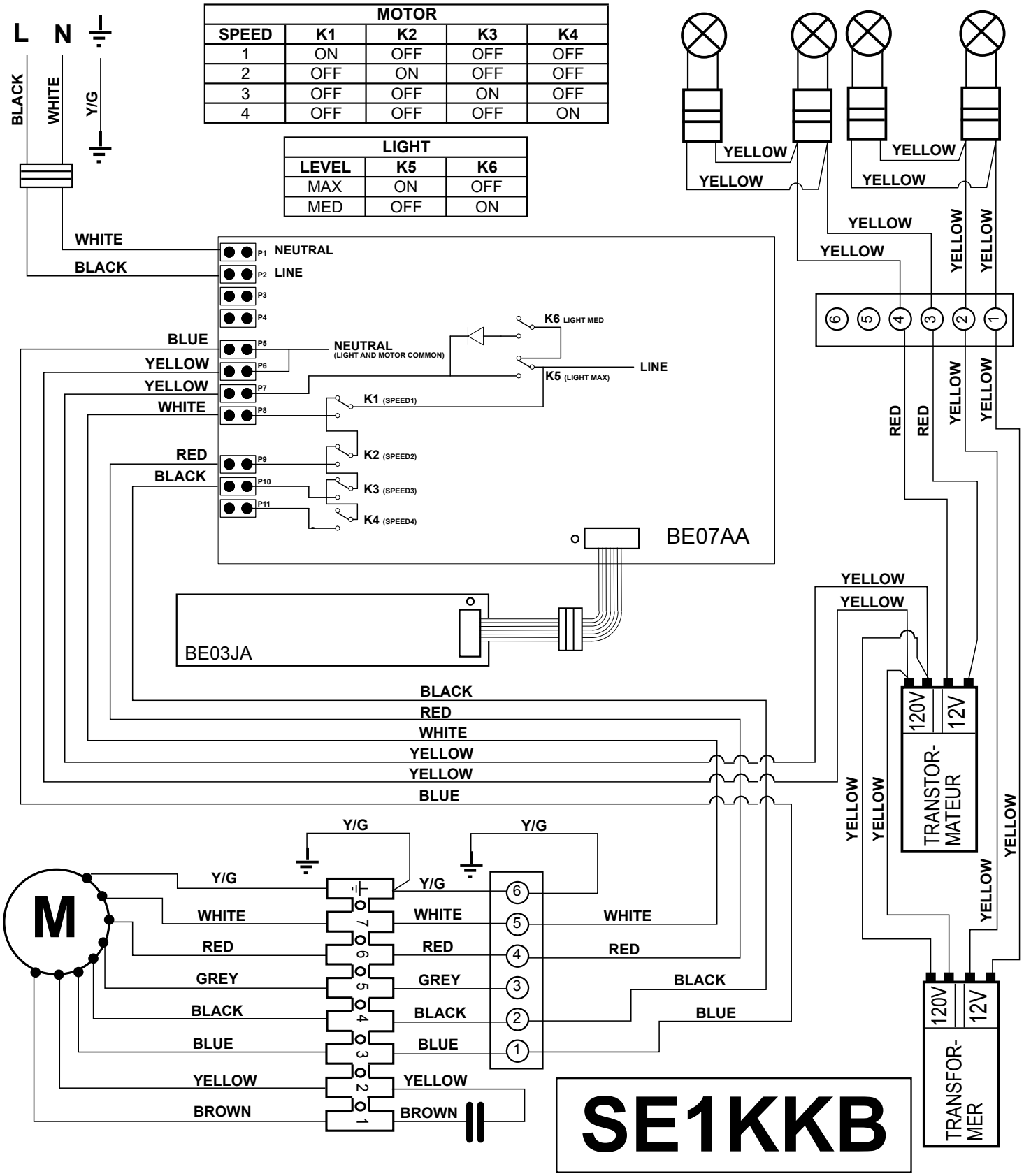

FEB07.0101